Hillmar
Hillmar Industries Ltd.
7371 Vantage Way
Delta, BC V4G 1C9
P:604 946-7115 F:604 946-0329
info@hillmar.com www.hillmar.com

COUPLING RKSM
RKSM-120-MSS-LSH-0315-20-1050
SPECIFICATION SHEET
SLS & MKTG
ENGLISH

Sheet Number:	
Job Number:	
Form Number:	429-680-49384PT
Company / Project Reference:	
Date.:	
Page.:	1 OF 1
Document Package No.:	
Rev.:	

Inventor Drawing

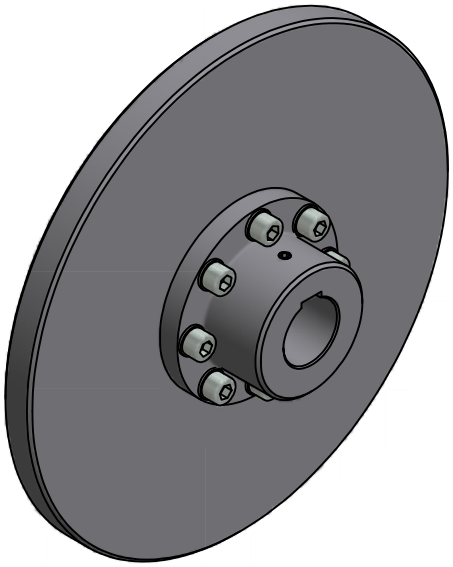

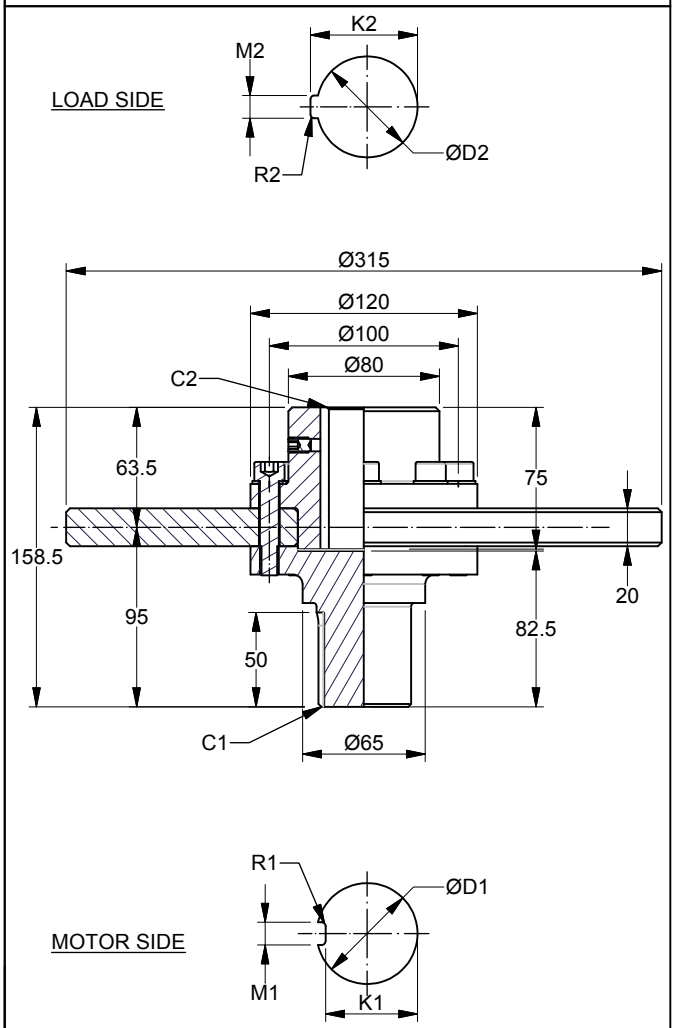

FEATURE	CODE
Rigid coupling	RKSM
Coupling size (Hub OD)	120
Motor side	MSS
Load side	LSH
Disc diameter (mm)	0315
Disc thickness (mm)	20
Maximum coupling torque (Nm)	1050

Example for ordering	RKSM-120-MSS-LSH-0315-20-1050

TECHNICAL DATA

Disc model	SDBD-0315-20-120
Disc diameter (mm)	315
Hub bore size MIN. (mm)	40
D1 MAX. (mm)	50
D2 MAX. (mm)	50
Moment of inertia (kgm^2)	0.157
Mounting bolts	8 x M10
Bolt tightening torque (Nm)	49
MAX. coupling torque TkMAX (Nm)	1050
MAX. coupling speed (RPM)	4100
Weight (kg)	17

CUSTOMER SPECIFICATIONS

Motor side	Load side
D1:_____mm	D2:_____mm
M1:_____mm	M2:_____mm
K1:_____mm	K2:_____mm
R1:_____mm	R2:_____mm
C1:_____mm	C2:_____mm

NOTES

Coupling balancing grade ISO 1940-G6.3 is guaranteed for all coupling parts.

All figures are nominal figures only

All dimensions are in millimeters

Document Template #710-101-62058

** ALL TECHNICAL DATA IS SUBJECT TO CHANGE WITHOUT NOTICE **
Hillmar works have a fully registered ISO 9001-2008 quality assurance programme (QCB #01-1525)

C:\TEMP\a3f49bb3-e10c-4cd0-aed8-26c1c4c1b337\80000528288\HILLMAR\HILLMAR PRODUCTION\04 THRUSTER DB\0700-4\07004005 PKM-GKM-RKSM-RKX\SPC-SHT-PKM-GKM-RKSM-RKX\03 RKSM\49384 RKSM-120-MSS-LSH-0315-20-1050.idw